Mechanism and Drive Synthesis Lecture (Part II)
TrISToMM 2015, Izmir, Sunday, June 14th

Corves, Institut für Getriebetechnik und Maschinendynamik RWTH Aachen

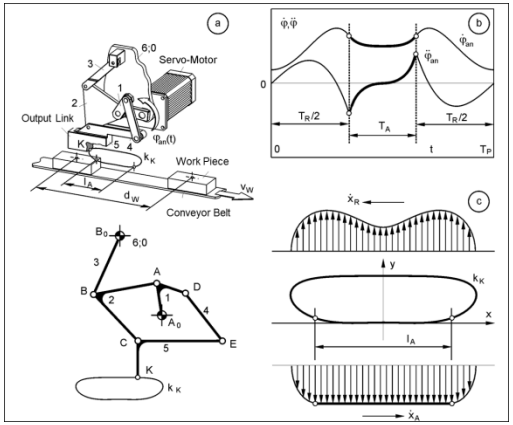

2 System Modelling

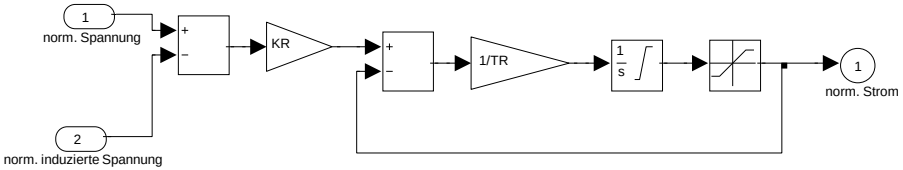

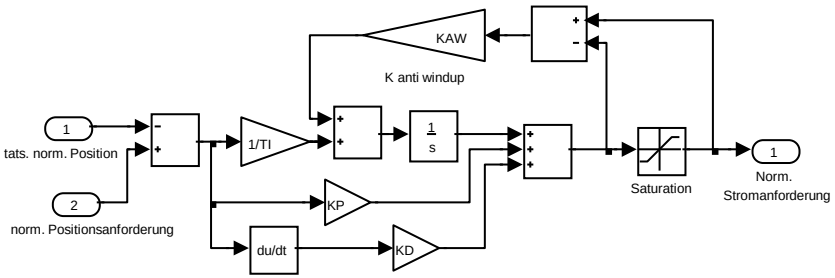

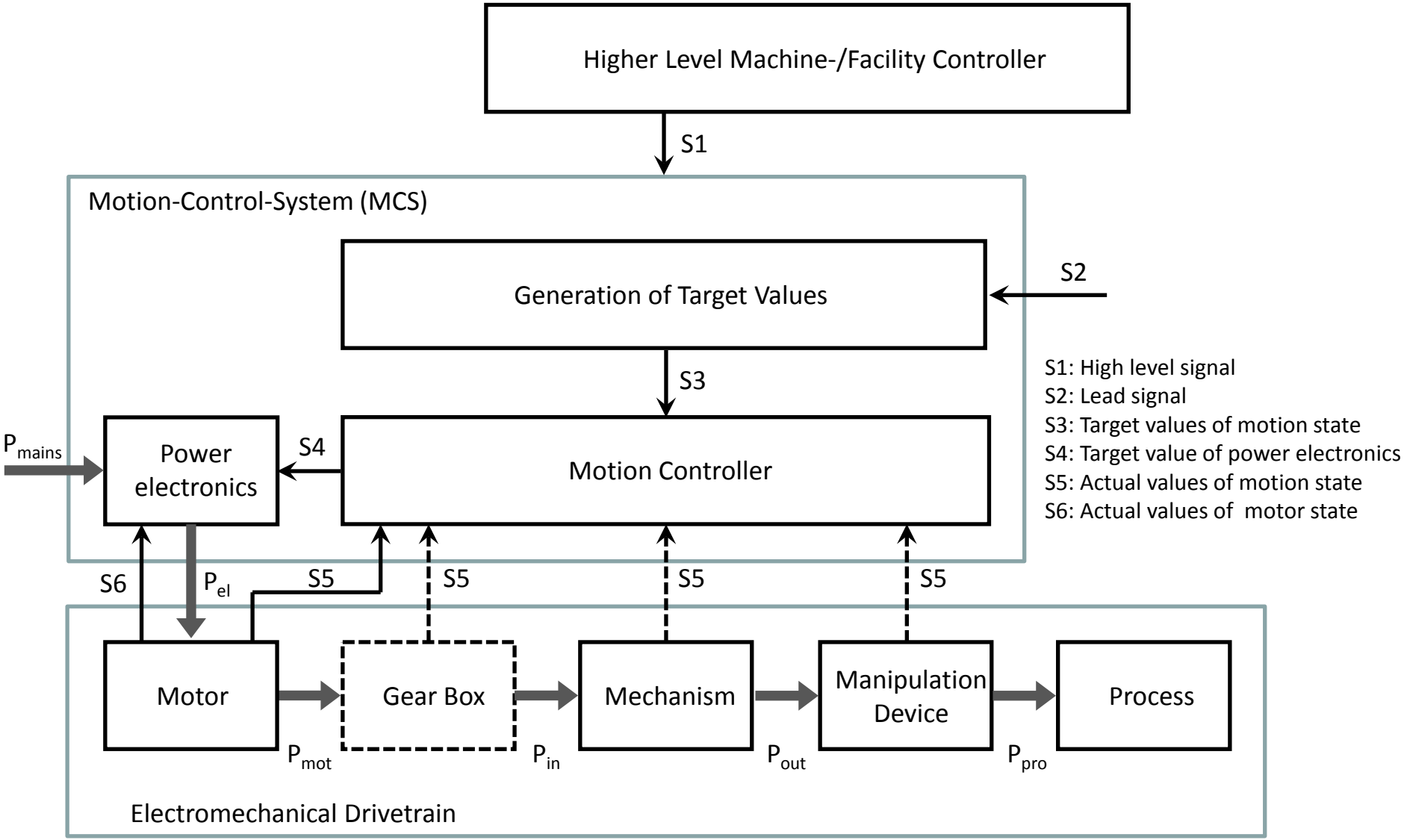
Higher Level Machine-/Facility Controller
S1
Motion-Control-System (MCS)
Generation of Target Values
S2
S3
Motion Controller
S4
Power electronics
P mains
S1: High level signal
S2: Lead signal
S3: Target values of motion state
S4: Target value of power electronics
S5: Actual values of motion state
S6: Actual values of motor state
S6
P el
S5
S5
S5
S5
Motor
Gear Box
Mechanism
Manipulation Device
Process
P mot
P in
P out
P pro
Electromechanical Drivetrain

Mechanisms

- are classical mechanical means to realize complex motions in diferent types of machines for texttile engineering, packaging and production
- Are often the heart of the machine that determines the productivity and efficiency of the fulfillment of the technological process
- Are more and more used in combination with Motion-Control-Systemes in order to increase flexibility and productivity.

… and

- will be completely replaced by Motion-Control-Systems in future ???

Limitations in Flexibility
The more specialized a mechanism is optimized for a specific operating situation, the worse it will generally be appropriate for other operating cases.

Design and Development Effort
MCS / Mechanism combinations require higher development costs and specialized control engineering expertise.

Requirements regarding the control behaviour of a Motion-Control-System
MCS / UG combinations pose special demands on the control behavior of a motion control system which often preclude standard controllers.

Motion transmission and motion conversion

- Simple motion transfer and / or conversion of the usual drive movement "rotation" of servo motors in a possibly desired output flow type “translation“.
- Use of a mechanism with approximately linear transmission ratio in a limited range of motion as a replacement for an upstream linear reduction gear.

Motion limitation through dead center positions

- Simple, safe and accurate motion limitation of working elements by mechanisms with defined dead center positions, such as a crank-rocker mechanism.

Link guidance

- Guidance of working elements - eg. to desired trajectories – through guidance mechanisms that ensure precise motions with minimized deviations during operation.

Drive relief under static operating load

- Reduction of peak values of the required driving torque by proper mechanism adaptation layout to a possibly highly variable course of a static output load.

Drive relief under dynamic operating load

Reduction of peak values of the required driving torque based on dynamic – i.e. inertia - effects using the following remedies:

- Reduction of the motor torque based on the reduction of the motor accelerations.
- Reduction of the motor torque based on producing high transmission ratios near to the dead center positions of the mechanism.
- Reduction of the motor torque as the sum based on the input and output inertias by initiating a time shift between the single maxima.
- Approximate mutual balancing of input and output side torque share by similar but opposite course.

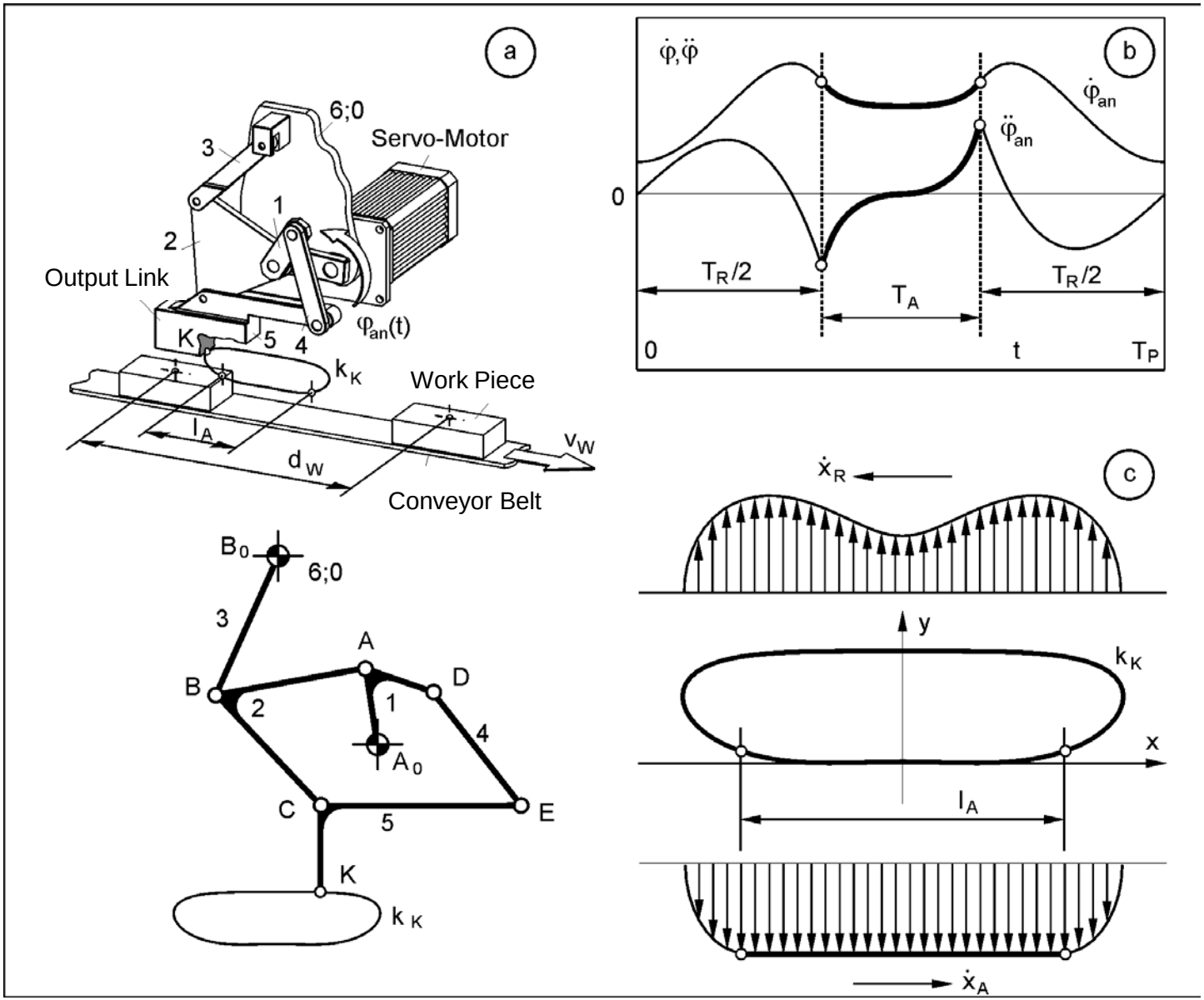
a
6;0
Servo-Motor
3
1
2
Output Link
K
5
4
$\varphi_{an}(t)$
k_K
Work Piece
l_A
d_W
v_W
Conveyor Belt
B_0
6;0
3
A
B
D
2
1
4
A_0
C
5
E
K
k_K
b
$\dot{\varphi},\ddot{\varphi}$
$\dot{\varphi}_{an}$
$\ddot{\varphi}_{an}$
0
$T_R/2$
T_A
$T_R/2$
0
t
T_P
c
$\dot{x}_R$
y
k_K
x
l_A
$\dot{x}_A$

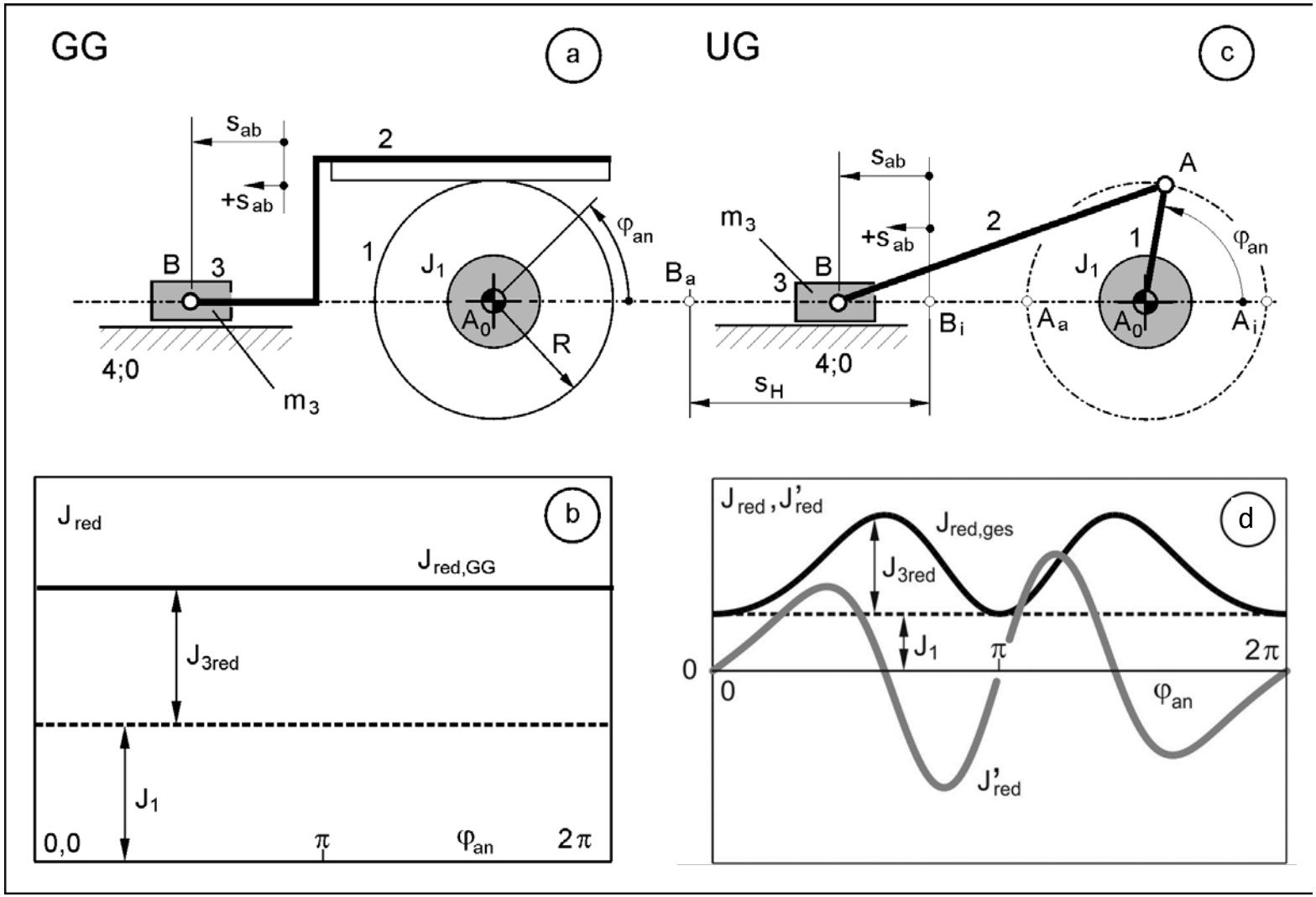

Drive torque <u>only for constant</u> transmission ratios

$$M_{in}(t) = J_{red,const} \cdot \ddot{\varphi}_{in}(t) + M_{out,red}(t, \varphi_{in})$$

Drive torque <u>for non-constant</u> transmission ratios

$$M_{in}(t) = J_{red}(\varphi_{in}) \cdot \ddot{\varphi}_{in}(t) + \frac{1}{2} \cdot J'_{red}(\varphi_{in}) \cdot \dot{\varphi}_{in}^2(t) + M_{out,red}(t, \varphi_{in})$$

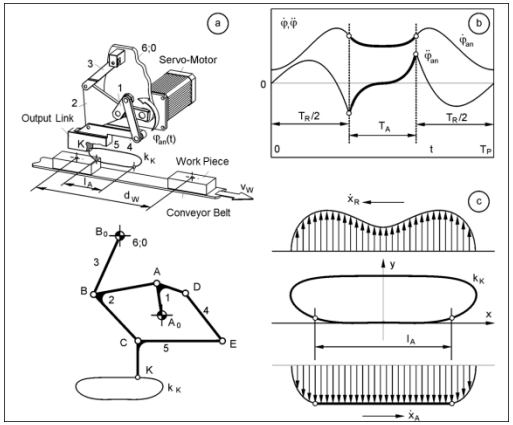

2 System Modelling

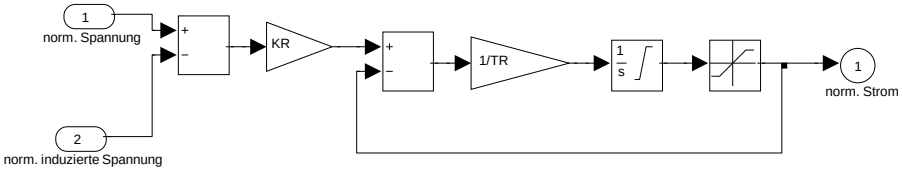

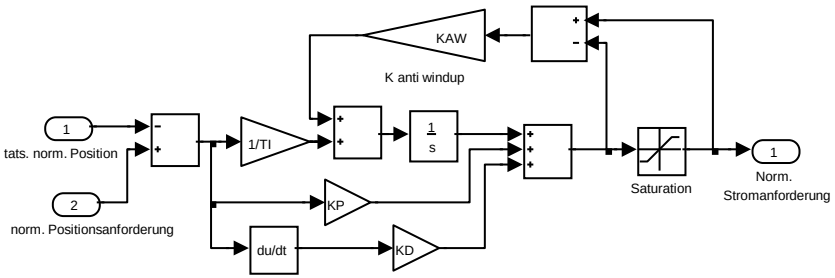

Current Controller Model (PI-Controller)

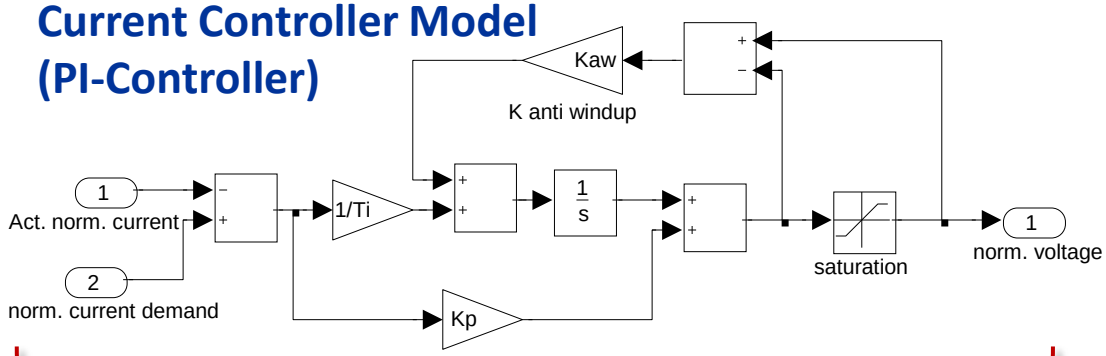

Motor Model Simplification as a DC Motor

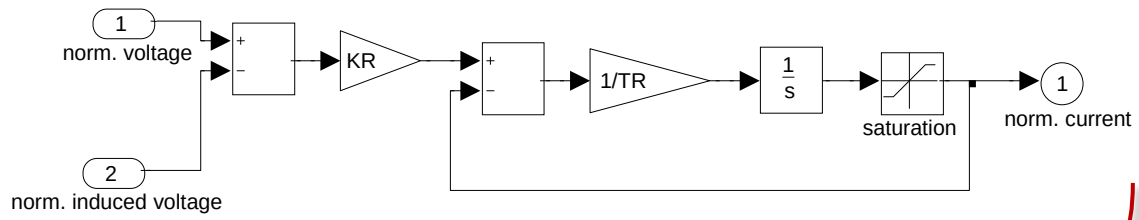

From Motion Controller

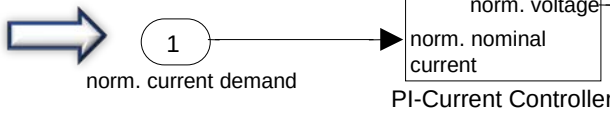

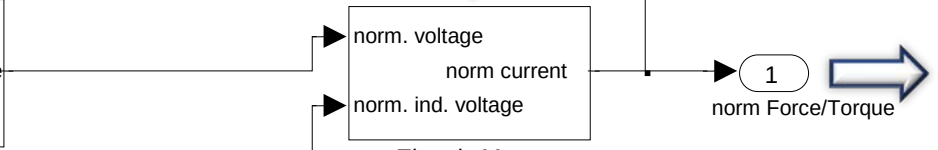

To Mechanical Model

From Mechanical Model

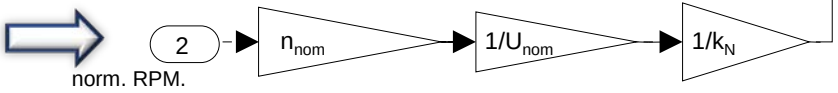

Simulation Model with Field Weakening

Motor Model
Simplification as a DC Motor

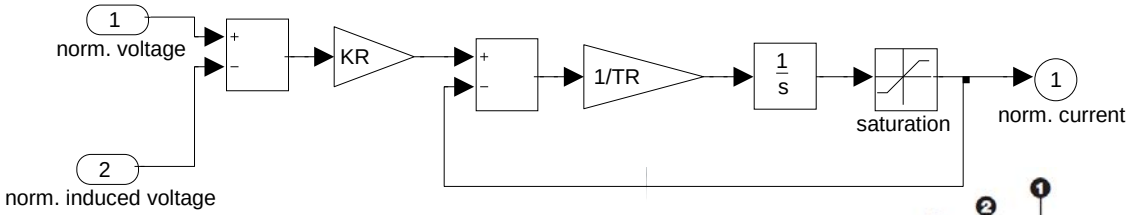

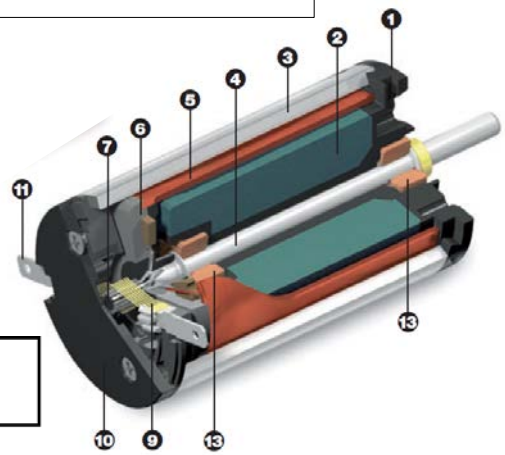

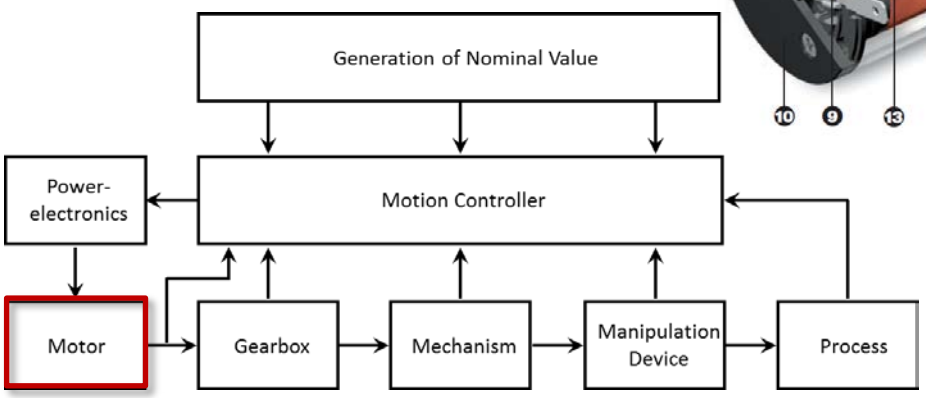

Equivalent Circuit Diagram

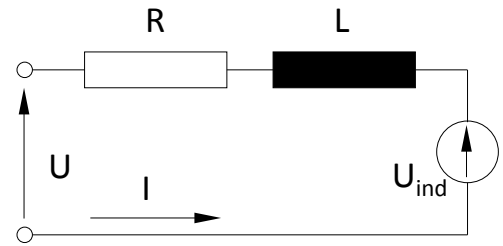

Differential equation

$$R \cdot I + L \cdot \frac{dI}{dt} = (U - U_{ind})$$

with $U_{ind} = \frac{1}{k_n} \cdot n$.

Introduction of normalized Variables

$$I = I_{nom} \cdot i \quad \text{and} \quad U = U_{nom} \cdot u$$

Additional parameters

$$K_R = \frac{U_{nom}}{I_{nom} \cdot R} \quad \text{und} \quad T_R = \frac{L}{R}$$

$$\Rightarrow \frac{di}{dt} = \frac{1}{T_R}\left(K_R(u - u_{ind}) - i\right)$$

Current Controller Model (PI-Controller)

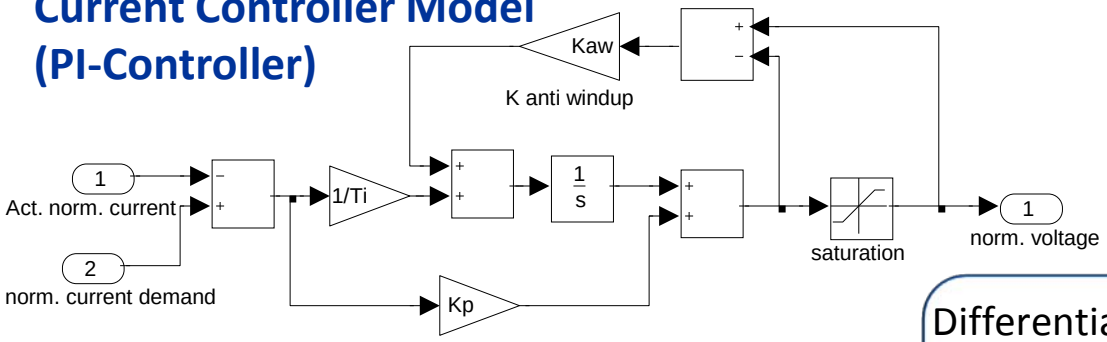

Motor Parameters

$$K_R = \frac{U_{nom}}{I_{nom} \cdot R} \quad \text{and} \quad T_R = \frac{L}{R}$$

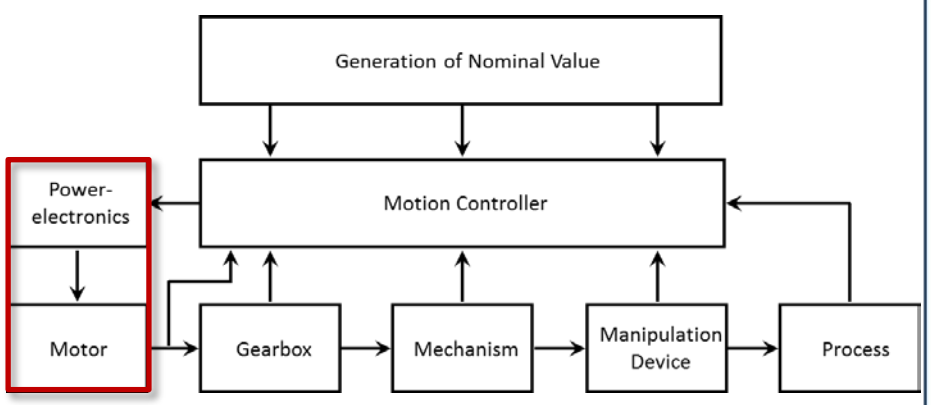

Differential equation of the Motor

$$\frac{di}{dt} = \frac{1}{T_R}\left(K_R\left(u - u_{ind}\right) - i\right)$$

Differential equation of the controller

$$u = -K_p\left(i - i_{dem}\right) - \frac{1}{T_i}\int\left(i - i_{dem}\right)dt$$

Insertion of u into the differential equation of the motor leads to

$$\frac{di}{dt} = -\frac{K_R \cdot K_p}{T_R}\left(i - i_{dem}\right) - \frac{K_R}{T_R \cdot T_i}\int\left(i - i_{dem}\right)dt - K_R u_{ind} - \frac{i}{T_R}$$

Differentation on both sides and sorting leads to

$$\frac{d^2 i}{dt^2} + \left(\frac{1 + K_R \cdot K_p}{T_R}\right)\frac{di}{dt} + \frac{K_R}{T_R \cdot T_i} i = \frac{K_R}{T_R \cdot T_i} i_{dem} - K_R u_{ind}$$

Current Controller Model (PI-Controller)

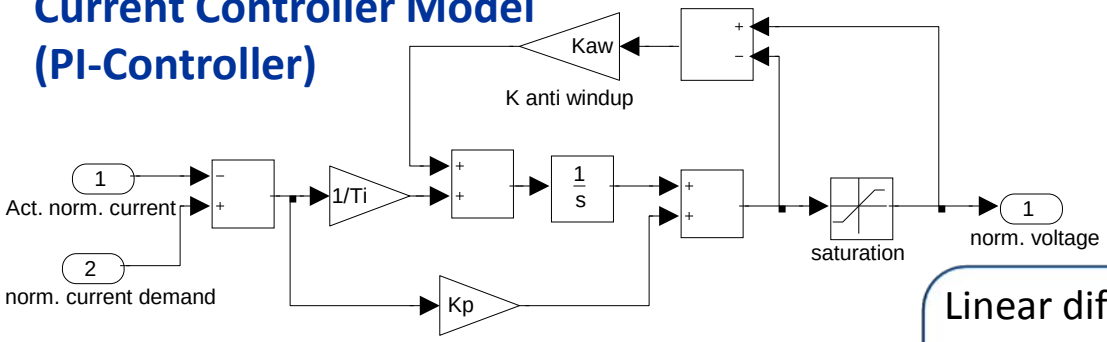

Motor Parameters

$$K_R = \frac{U_{nom}}{I_{nom} \cdot R} \quad \text{and} \quad T_R = \frac{L}{R}$$

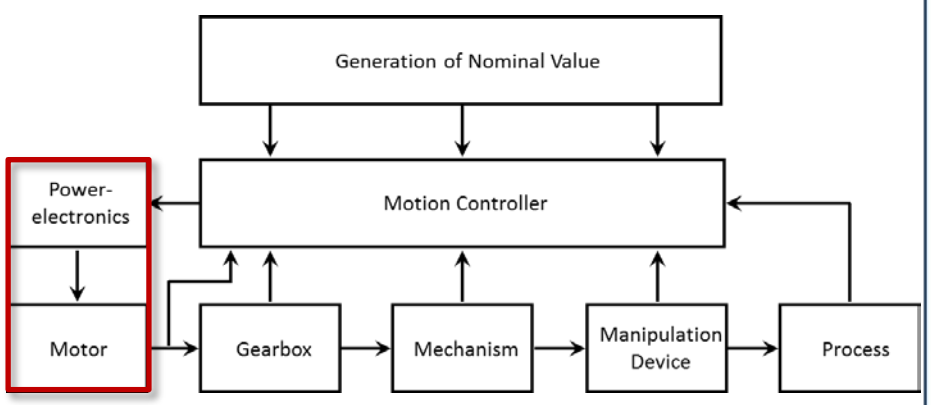

Linear differential equation of 2nd Order

$$\frac{d^2 i}{dt^2} + \left(\frac{1 + K_R \cdot K_p}{T_R}\right)\frac{di}{dt} + \frac{K_R}{T_R \cdot T_i} i = \frac{K_R}{T_R \cdot T_i} i_{dem} - K_R u_{ind}$$

Solution statement for homogeneous solution

$$i = C \cdot e^{\lambda t}; \quad \frac{di}{dt} = C \cdot \lambda e^{\lambda t}; \quad \frac{d^2 i}{dt^2} = C \cdot \lambda^2 e^{\lambda t}$$

Insertion of the solution statement into the homogeneoues differential equation yields the characteristic polynomial

$$\lambda^2 + \lambda \frac{(1 + K_R K_p)}{T_R} + \frac{K_R}{T_i \cdot T_R} = 0$$

The controller parameters K_p and T_i have to be determined in an optimum way

Current Controller Model (PI-Controller)

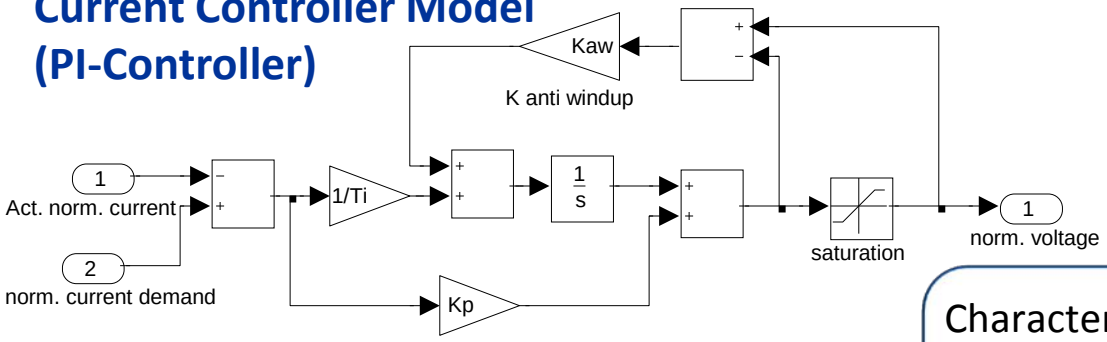

Motor Parameters

$$K_R = \frac{U_{nom}}{I_{nom} \cdot R} \quad \text{and} \quad T_R = \frac{L}{R}$$

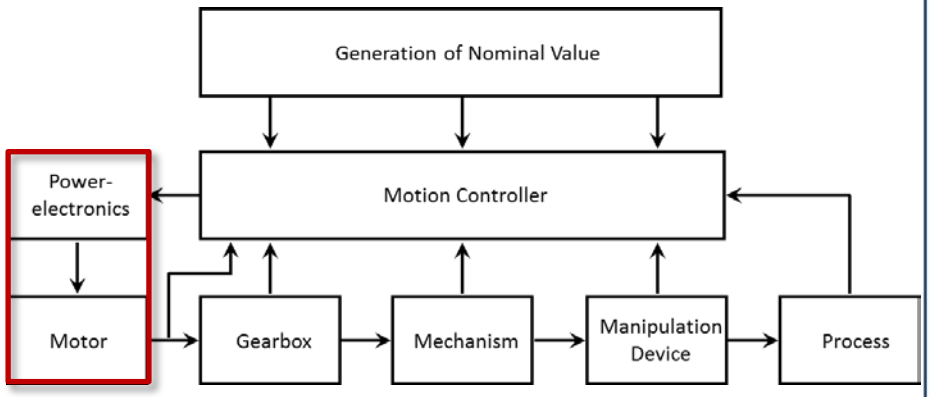

Characteristic polynomial of simulation model including motor and current controller model

$$\lambda^2 + \lambda \frac{(1 + K_R K_p)}{T_R} + \frac{K_R}{T_i \cdot T_R} = 0$$

Characteristic polynomial of damped single degree of freedom system

$$\lambda^2 + 2\lambda \cdot \vartheta \cdot \omega_0 + \omega_o^2 = 0$$

The simulation model including motor and current controller model will behave identically to the damped single degree of freedom system if both polynomials are identical!

Pole placement for damping ratio $\vartheta = 1$

$$\lambda^2 + \lambda \frac{(1 + K_R K_p)}{T_R} + \frac{K_R}{T_i \cdot T_R} \overset{!}{=} \lambda^2 + 2\lambda \cdot \omega_0 + \omega_0^2$$

Current Controller Model (PI-Controller)

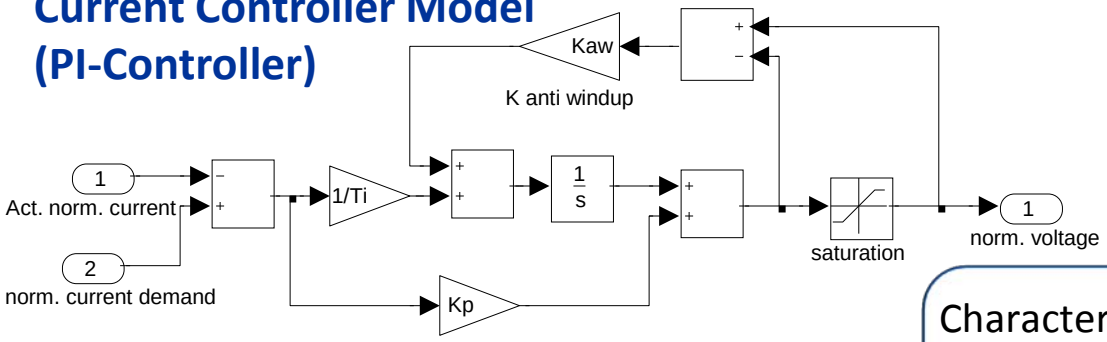

Motor Parameters

$$K_R = \frac{U_{nom}}{I_{nom} \cdot R} \quad \text{and} \quad T_R = \frac{L}{R}$$

Characteristic polynomial and pole placement for damping ratio $\vartheta = 1$

$$\lambda^2 + \lambda \frac{(1 + K_R K_p)}{T_R} + \frac{K_R}{T_i \cdot T_R} \overset{!}{=} \lambda^2 + 2\lambda \cdot \omega_0 + \omega_0^2$$

Comparison of coefficients yield

$$\frac{1 + K_R K_P}{T_R} = 2\omega_0 \text{ und } \frac{K_R}{T_i \cdot T_R} = \omega_0^2$$

Thus the controller parameters can be determined as

$$K_P = \frac{2\omega_0 \cdot T_R - 1}{K_R} \text{ and } T_i = \frac{K_R}{\omega_0^2 \cdot T_R}$$

The tuning frequency ω_0 must be given in a meaningful way by the user!

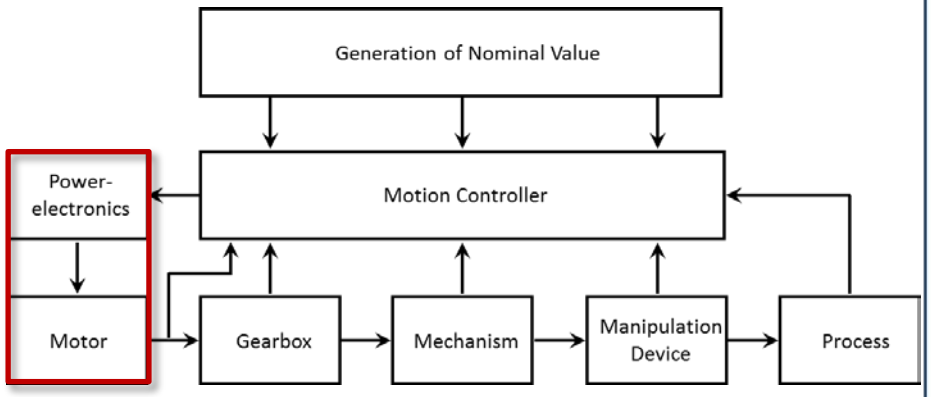

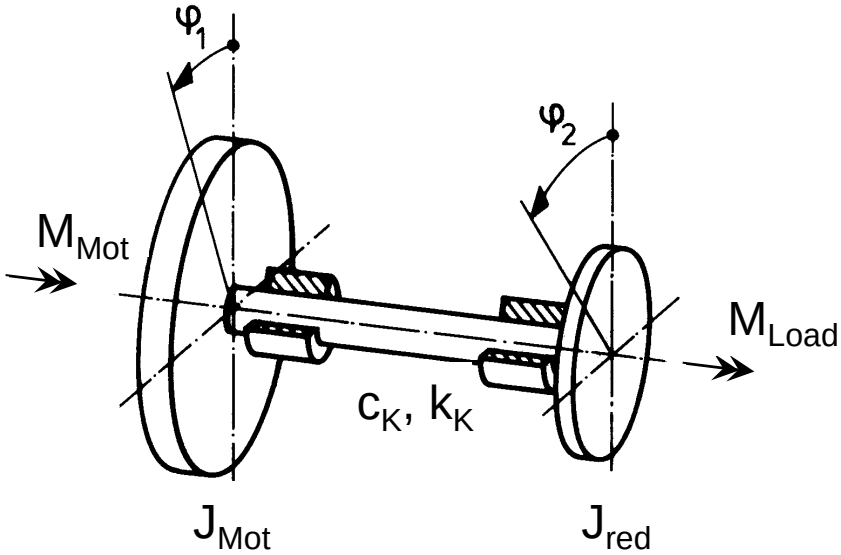

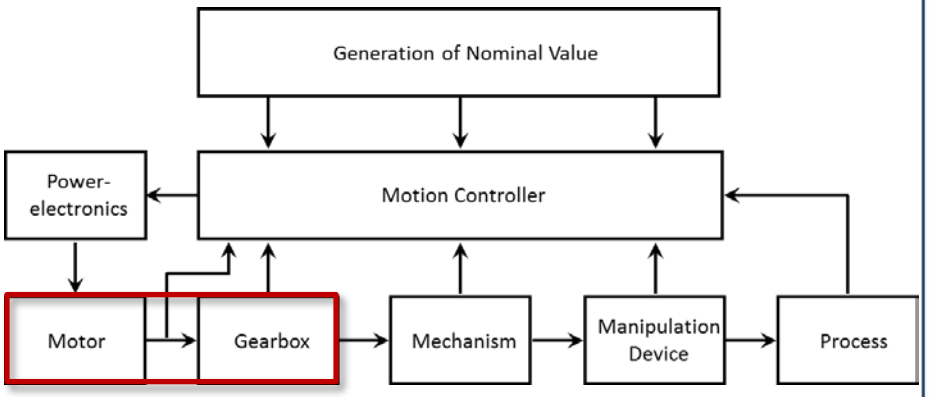

Mechanical differential equation system:

$$J_{Mot} \cdot \ddot{\varphi}_1 = -\left(c_K \cdot (\varphi_1 - \varphi_2) + k_K \cdot (\dot{\varphi}_1 - \dot{\varphi}_2) - M_{Mot}\right)$$

$$J_{red} \cdot \ddot{\varphi}_2 = \left(c_K \cdot (\varphi_1 - \varphi_2) + k_K \cdot (\dot{\varphi}_1 - \dot{\varphi}_2) + M_{Load}\right)$$

Introduction of the relative coordinate

$$\varphi_r = (\varphi_1 - \varphi_2),\ \dot{\varphi}_r = (\dot{\varphi}_1 - \dot{\varphi}_2),\ \ddot{\varphi}_r = (\ddot{\varphi}_1 - \ddot{\varphi}_2)$$

leads to

$$\ddot{\varphi}_r + k_K \cdot \frac{J_{Mot} + J_{red}}{J_{Mot} \cdot J_{red}} \dot{\varphi}_r + c_K \cdot \frac{J_{Mot} + J_{red}}{J_{Mot} \cdot J_{red}} \varphi_r = \frac{M_{Mot}}{J_{Mot}} - \frac{M_{Load}}{J_{red}}$$

with

$$\omega_0^2 = c_K \cdot \frac{J_M + J_{red}}{J_M \cdot J_{red}} \quad \text{und} \quad \delta = k_K \cdot \frac{J_M + J_{red}}{2 J_M \cdot J_{red}}$$

Current Controller Model (PI-Controller)

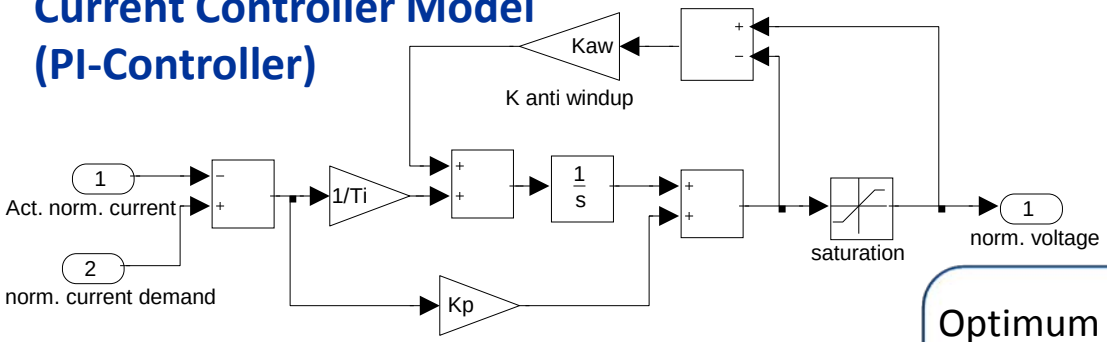

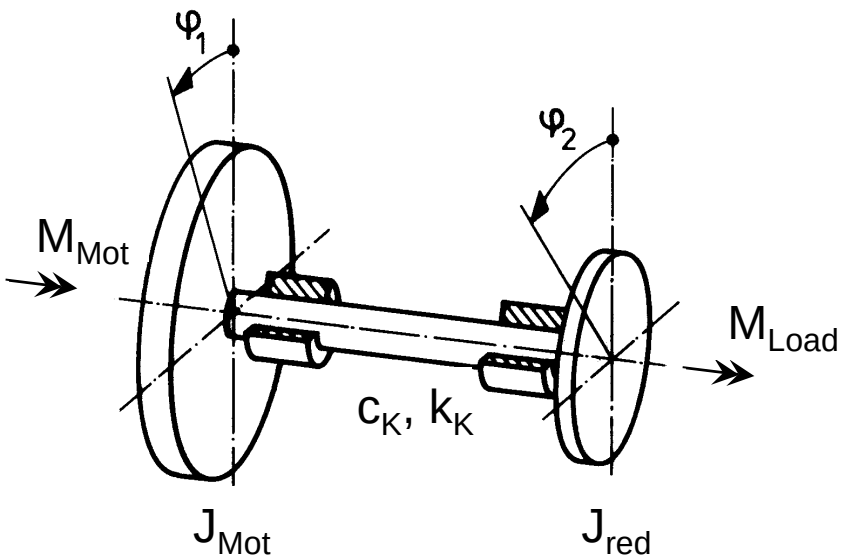

Optimum setting of current controller parameters according to pole placement method :

$$K_P = \frac{2\omega_0 \cdot T_R - 1}{K_R} \text{ and } T_i = \frac{K_R}{\omega_0^2 \cdot T_R}$$

Here: $(\omega_0)_{elect.} = \omega_0$

Natural frequency of the mechanical system:

$$(\omega_0)_{mech.} = \sqrt{c_K \cdot \frac{J_M + J_{red}}{J_M \cdot J_{red}}}$$

Matching condition:

$$(\omega_0)_{elect.} >> (\omega_0)_{mech.} = \sqrt{c_K \cdot \frac{J_M + J_{red}}{J_M \cdot J_{red}}}$$

Lagrange Formalism

$$\frac{d}{dt}\left(\frac{\partial E_k(\varphi_{mot})}{\partial \dot{\varphi}_{mot}}\right)-\frac{\partial E_k(\varphi_{mot})}{\partial \varphi_{mot}}=\sum M$$

$$E_k(\varphi_{mot})=\frac{1}{2}J_{mot,red}(\varphi_{mot})\cdot\dot{\varphi}_{mot}^{\,2}$$

$$\Rightarrow \frac{\partial E_k}{\partial \varphi_{mot}}=\frac{1}{2}J'_{mot,red}(\varphi_{mot})\cdot\dot{\varphi}_{mot}^{\,2}$$

and $$\frac{\partial E_k}{\partial \dot{\varphi}_{mot}}=J_{mot,red}(\varphi_{mot})\cdot\dot{\varphi}_{mot}$$

$$\Rightarrow \frac{d}{dt}\left(\frac{\partial E_k(\varphi_{mot})}{\partial \dot{\varphi}_{mot}}\right)$$

$$=J'_{mot,red}(\varphi_{mot})\cdot\dot{\varphi}_{mot}^{\,2}+J_{mot,red}(\varphi_{mot})\cdot\ddot{\varphi}_{mot}$$

⇨ Differential equation of rigid mechanisms:

$$J_{mot,red}(\varphi_{mot})\,\ddot{\varphi}_{mot}+\frac{1}{2}J'_{mot,red}(\varphi_{mot})\,\dot{\varphi}_{mot}^{\,2}=\sum M$$

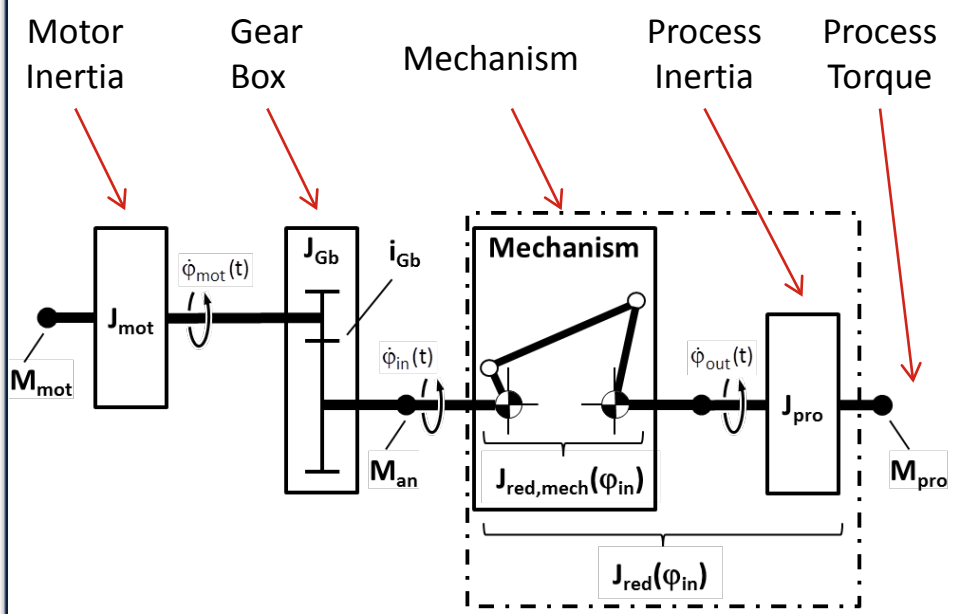

On the motor shaft reduced moment of inertia

$$\frac{1}{2}J_{mot,red}(\varphi_{mot})\cdot\dot{\varphi}_{mot}^{\,2}=\frac{1}{2}J_{mot}\cdot\dot{\varphi}_{mot}^{\,2}+\frac{1}{2}J_{pro}\cdot\dot{\varphi}_{out}^{\,2}$$
$$+\frac{1}{2}\left(J_{red,mech}(\varphi_{in})+J_{Gb}\right)\cdot\dot{\varphi}_{in}^{\,2}$$

Diffential equation of rigid mechanisms:

$$J_{mot,red}(\varphi_{mot})\cdot\ddot{\varphi}_{mot}+\frac{1}{2}J'_{mot,red}(\varphi_{mot})\cdot\dot{\varphi}_{mot}^{\,2}=\sum M$$

New equation, neglecting torque M_{pro}:

$$M_{mot}(t,i_{Gb})=J_{mot}\cdot\ddot{\varphi}_{mot}(t,i_{Gb})+\frac{\left(J_{Gb}(i_{Gb})+J_{pro}\right)\cdot\ddot{\varphi}_{out}(t)}{i_{Gb}^2}$$

Problem statement:
Optimum gearbox ratio i_{Gb} considering that J_{Gb} depends on i_{Gb}.

For typical gearbox series:

$$J_{Gb}(i_{Gb})=a_2\cdot i_{Gb}^2+a_0=J_{Gb,mot}\cdot i_{Gb}^2+J_{Gb,out}$$

Introduction into new equation yields:

$$M_{mot}(t,i_{Gb})=\left(J_{mot}+J_{Gb,mot}\right)\cdot\ddot{\varphi}_{mot}(t,i_{Gb})+\frac{\left(J_{Gb,out}+J_{pro}\right)\cdot\ddot{\varphi}_{out}(t)}{i_{Gb}^2}$$

No mechanism, therefore

$$\dot{\varphi}_{in}=\dot{\varphi}_{out}$$

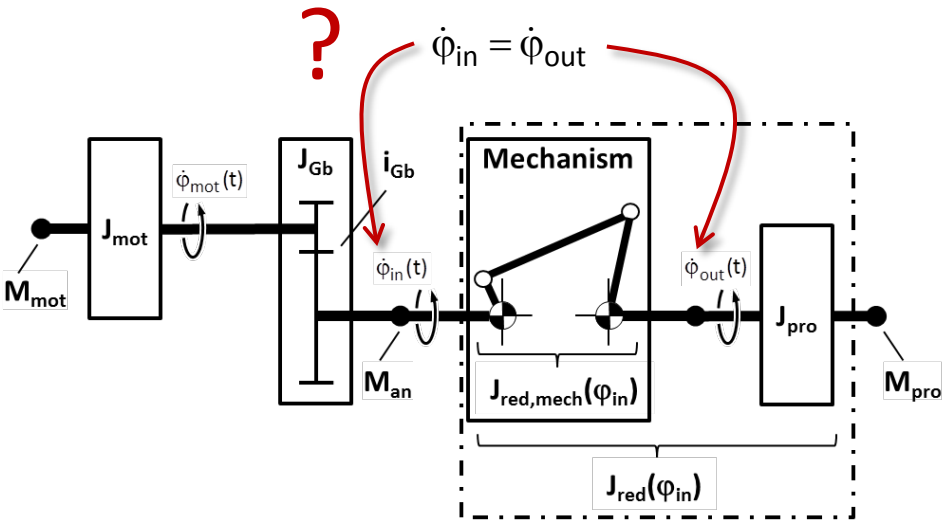

On the motor shaft reduced moment of inertia

$$\frac{1}{2}J_{mot,red}(\varphi_{mot})\cdot\dot{\varphi}_{mot}^{\,2}=\frac{1}{2}J_{mot}\cdot\dot{\varphi}_{mot}^{\,2}+\frac{1}{2}J_{pro}\cdot\dot{\varphi}_{out}^{\,2}+\frac{1}{2}\left(J_{red,mech}(\varphi_{in})+J_{Gb}\right)\cdot\dot{\varphi}_{in}^{\,2}$$

Resultant reduced moment of inertia

$$J_{mot,red}(\varphi_{mot})=J_{mot}+\frac{\left(J_{pro}+J_{Gb}\right)}{i_{Gb}^2}$$

Simplified equation for motor torque:

$$M_{mot}(t,i_{Gb}) = \left(J_{mot} + J_{Gb,mot}\right)\cdot \ddot{\varphi}_{mot}(t,i_{Gb}) + \frac{\left(J_{Gb,out} + J_{pro}\right)\cdot \ddot{\varphi}_{out}(t)}{i_{Gb}^2}$$

Relationship between output and motor motion:

$$\ddot{\varphi}_{mot}(t,i_{Gb}) = i_{Gb}^2 \cdot \cdot \ddot{\varphi}_{out}(t)$$

Final motor torque equation:

$$M_{mot}(t,i_{Gb}) = \left(J_{mot} + J_{Gb,mot}\right)\cdot \ddot{\varphi}_{mot}(t,i_{Gb}) + \frac{\left(J_{Gb,out} + J_{pro}\right)\cdot \ddot{\varphi}_{out}(t)}{i_{Gb}^2}$$

Minimal motor torque for

$$\frac{dM_{mot}(t)}{di_{Gb}} = 0:$$

$$i_{Gb,opt} = \sqrt{\frac{J_{Gb,out} + J_{pro}}{J_{mot} + J_{Gb,mot}}}$$

No mechanism, therefore

$$\dot{\varphi}_{in} = \dot{\varphi}_{out}$$

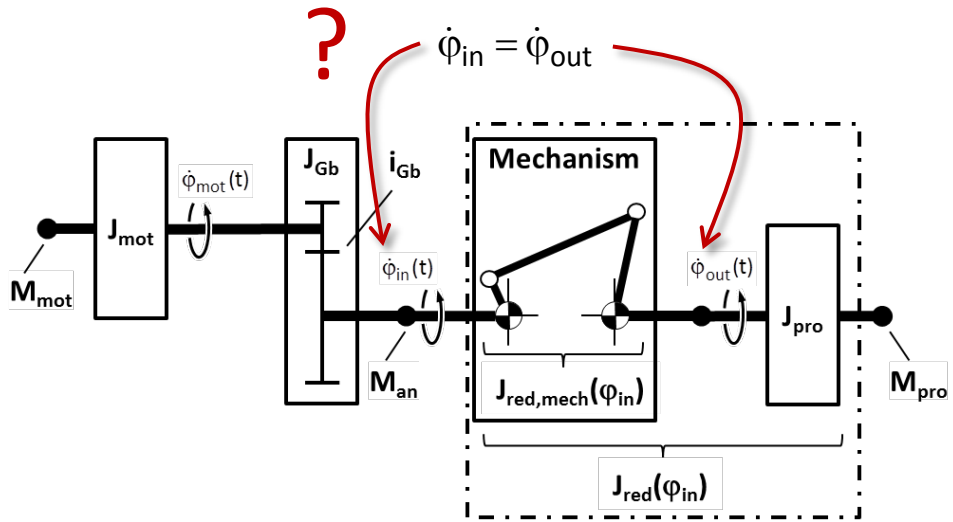

On the motor shaft reduced moment of inertia

$$\frac{1}{2}J_{mot,red}(\varphi_{mot})\cdot \dot{\varphi}_{mot}^{\,2} = \frac{1}{2}J_{mot}\cdot \dot{\varphi}_{mot}^{\,2} + \frac{1}{2}J_{pro}\cdot \dot{\varphi}_{out}^{\,2} + \frac{1}{2}\left(J_{red,mech}(\varphi_{in}) + J_{Gb}\right)\cdot \dot{\varphi}_{in}^{\,2}$$

Resultant reduced moment of inertia

$$J_{mot,red}(\varphi_{mot}) = J_{mot} + \frac{\left(J_{pro} + J_{Gb}\right)}{i_{Gb}^2}$$

Schematic of the Drive System With varying Load Inertia

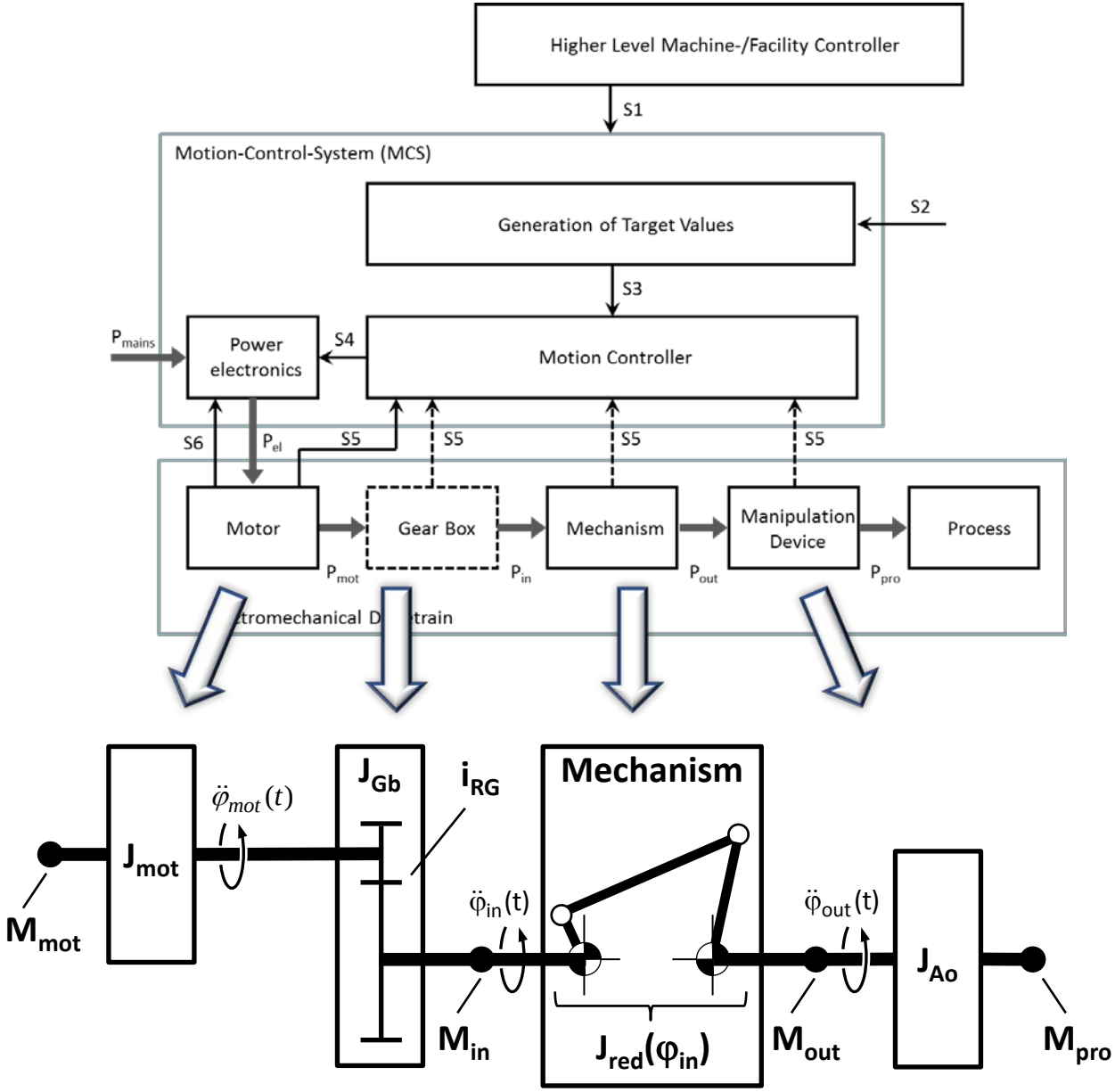

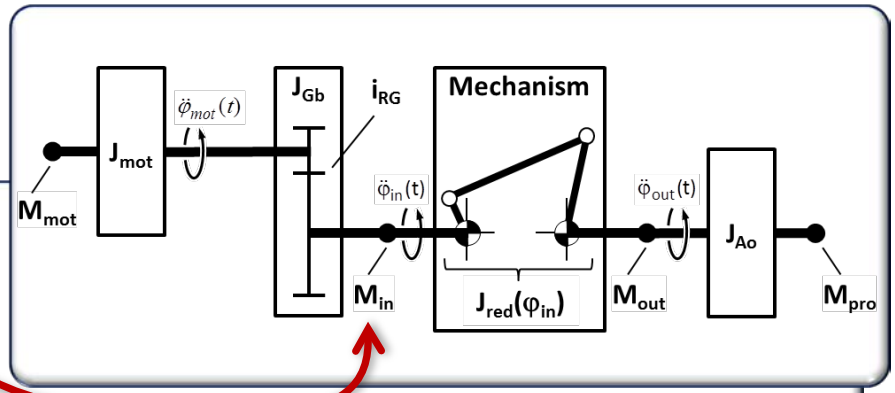

The motor torque can be determined as follows:

$$M_{mot}(t,i_{Gb}) = J_{mot}\ddot{\varphi}_{mot}(t,i_{Gb}) + \frac{J_{Gb}(i_{Gb})\cdot\ddot{\varphi}_{in}(t) + M_{in}(t)}{i_{Gb}}$$

with $M_{in}(t) = J_{red}(\varphi_{in})\cdot\ddot{\varphi}_{in}(t) + \frac{1}{2}\cdot J'_{red}(\varphi_{in})\cdot\dot{\varphi}_{in}^2(t) + M_{out,red}(t,\varphi_{in})$

For typical gearbox series: $J_{Gb}(i_{Gb}) = a_2\cdot i_{Gb}^2 + a_0 = J_{Gb,mot}\cdot i_{Gb}^2 + J_{Gb,out}$

The sqare of the effective motor torque is to be minimized

$$M_{mot}^2(t) = \frac{1}{T_T}\int_0^{T_T}\left(\ddot{\varphi}_{in}(t)\left(i_{Gb}\left(J_{mot} + J_{Gb,mot}\right) + \frac{J_{Gb,out}}{i_{Gb}}\right) + \frac{M_{in}(t)}{i_{Gb}}\right)^2 dt$$

Optimal Transmission ratio

$$i_{RG,opt} = \sqrt{\sqrt{\frac{K_1\cdot J_{Gb,out}^2 + 2J_{Gb,out}\cdot K_2 + K_3}{K_1\cdot\left(J_{mot} + J_{Gb,mot}\right)^2}}} \quad \text{with } K_1 = \frac{1}{T_T}\int_0^{T_T}\ddot{\varphi}_{in}^2\,dt,\; K_2 = \frac{1}{T_T}\int_0^{T_T}\ddot{\varphi}_{in}\,M_{in}dt,\; K_3 = \frac{1}{T_T}\int_0^{T_T}M_{in}^2 dt$$

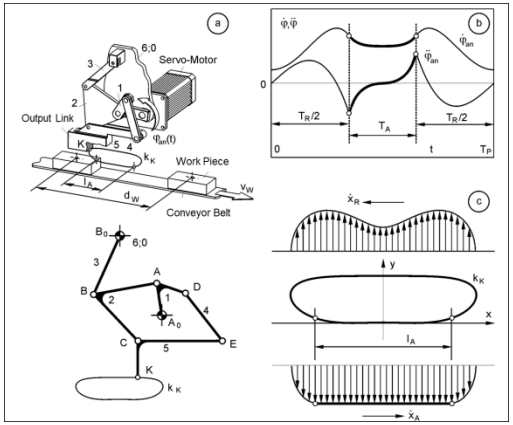

2 System Modelling

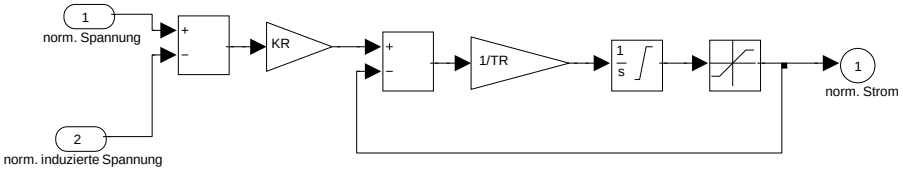

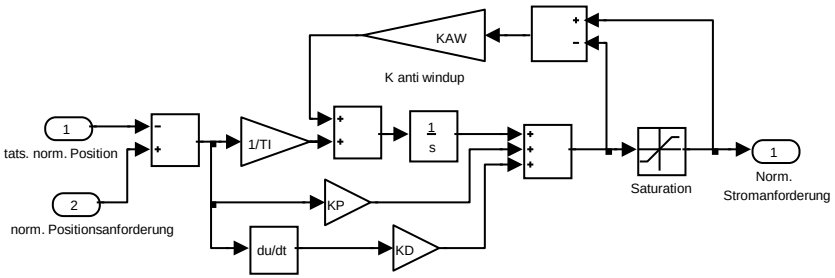

Typical Symmetric Trapezoidal Acceleration Profile

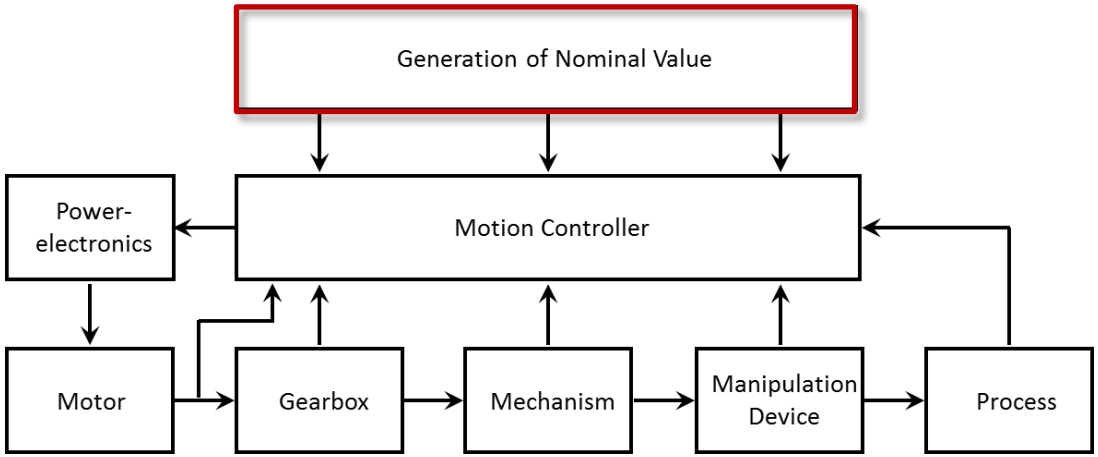

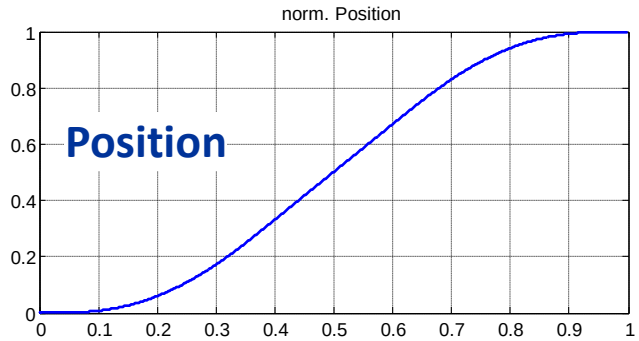

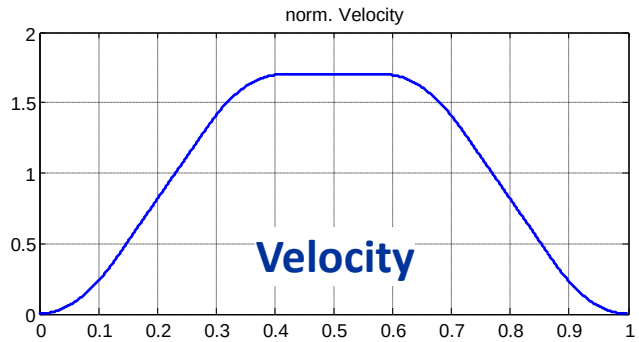

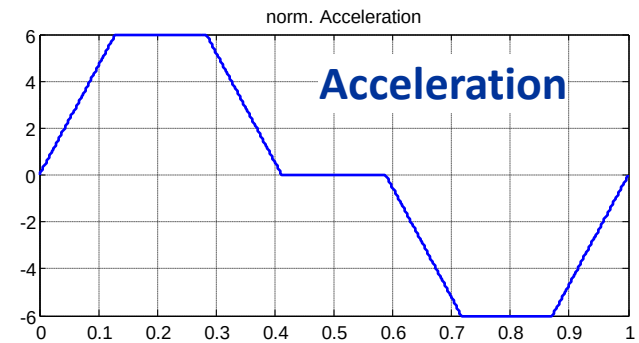

Motion Demand: Trapezoidal Acceleration Profile (I)

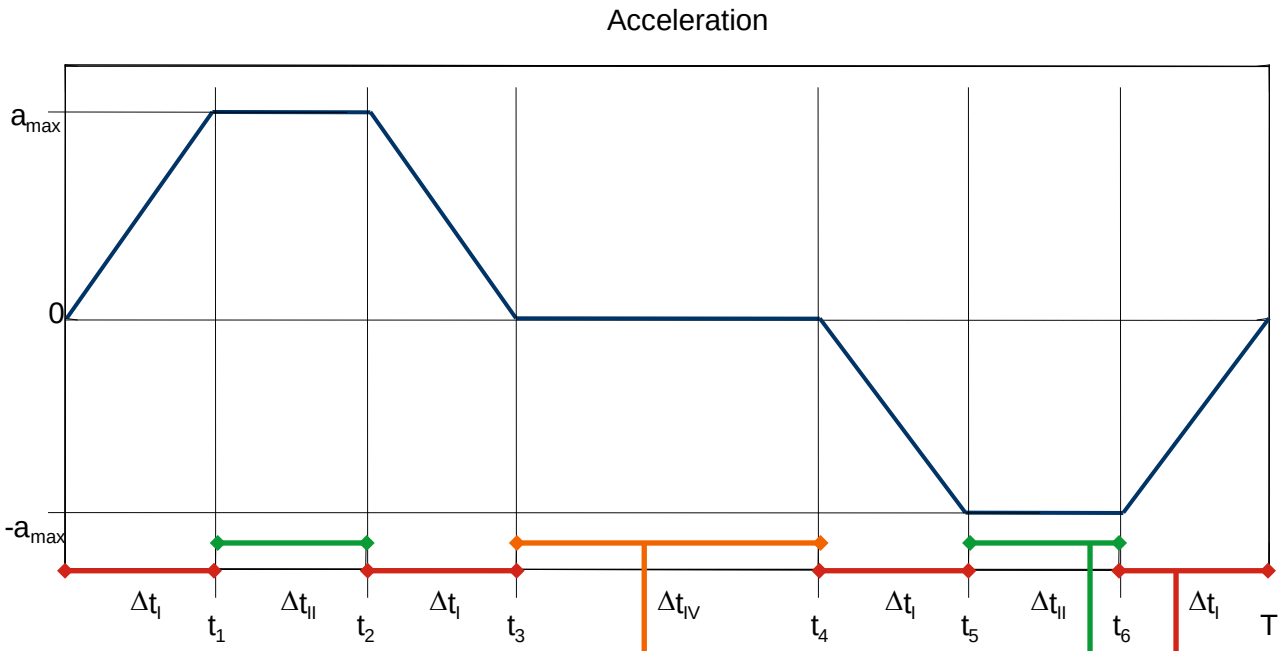

With Δt_I, Δt_{II} und Δt_{IV} as follows:

$$\Delta t_I = T - \frac{v_{max}}{a_{max}} - \frac{x_{max}}{v_{max}}$$

$$\Delta t_{II} = 2 \cdot \frac{v_{max}}{a_{max}} + \frac{x_{max}}{v_{max}} - T$$

$$\Delta t_{IV} = T - 4\Delta t_I - 2\Delta t_{II}$$

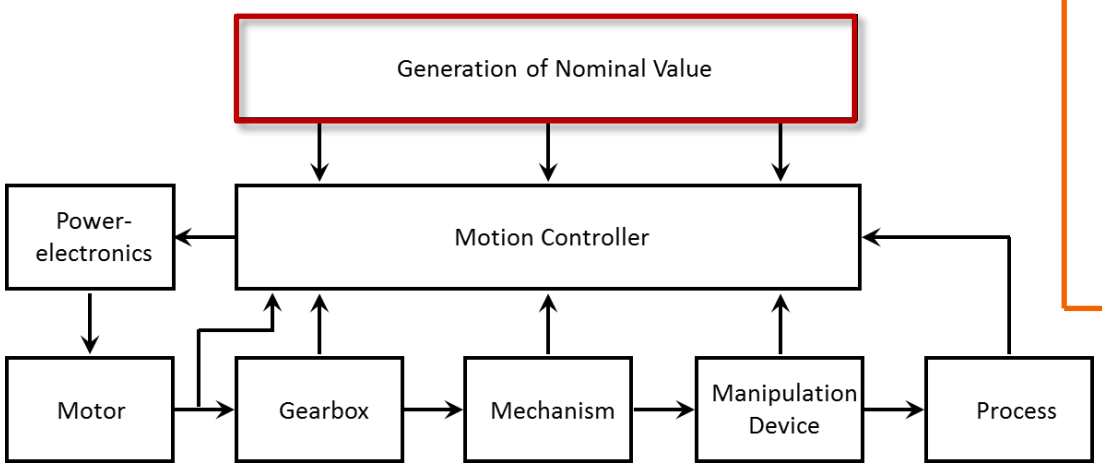

Motion Demand: Trapezoidal Acceleration Profile (II)

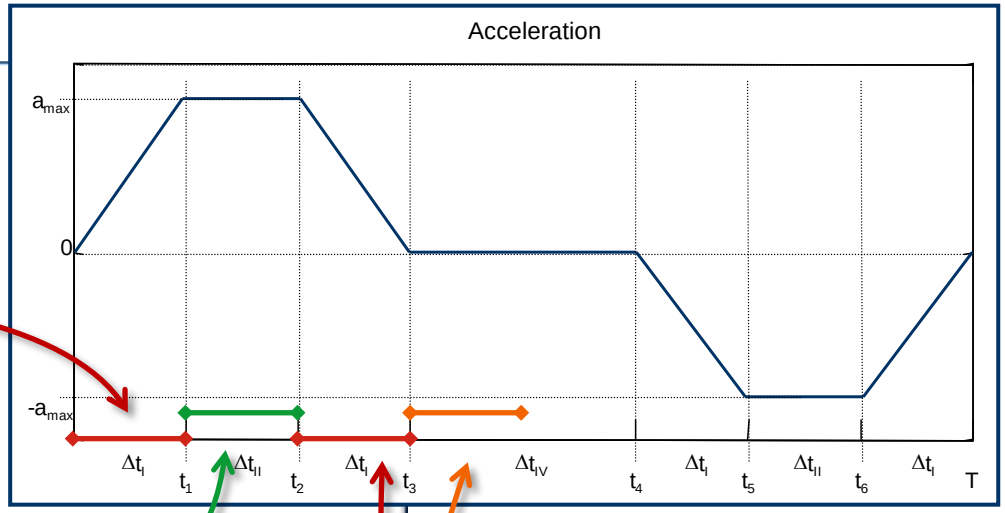

$(0 \le t \le t_1)$

$$a(t) = a_{max} \cdot \frac{t}{t_1}$$

$$v(t) = \tfrac{1}{2} a_{max} \cdot \frac{t^2}{t_1}$$

$$x(t) = \tfrac{1}{6} a_{max} \cdot \frac{t^3}{t_1}$$

$(t_1 < t \le t_2)$

$$a(t) = a_{max}$$

$$v(t) = a_{max} \cdot \left(t - \tfrac{1}{2} \cdot t_1\right)$$

$$x(t) = \tfrac{1}{2} a_{max} \cdot (t - t_1)^2 + v(t = t_1) \cdot (t - t_1) + x(t = t_1)$$

$(t_2 < t \le t_3)$

$$a(t) = a_{max} \cdot \frac{t_3 - t}{t_1}$$

$$v(t) = a_{max} \cdot \left((t - t_2) - \tfrac{1}{2} \cdot \frac{(t - t_2)^2}{t_1} \right) + v(t = t_2)$$

$$x(t) = a_{max} \cdot \left(\tfrac{1}{2} \cdot (t - t_2)^2 - \tfrac{1}{6} \cdot \frac{(t - t_2)^3}{t_1} \right) + v(t = t_2) \cdot (t - t_2) + x(t = t_2)$$

$(t_3 < t \le T/2)$

$$a(t) = 0$$

$$v(t) = v_{max}$$

$$x(t) = v_{max} \cdot (t - t_3) + x(t = t_3)$$

$(T/2 < t \le T)$

$$a(t) = -a(t = T - t)$$

$$v(t) = v(t = T - t)$$

$$x(t) = x_{max} - x(t = T - t)$$

with Δt_I, Δt_{II} und Δt_{IV} as follows

$$\Delta t_I = T - \frac{v_{max}}{a_{max}} - \frac{x_{max}}{v_{max}}$$

$$\Delta t_{II} = 2 \cdot \frac{v_{max}}{a_{max}} + \frac{x_{max}}{v_{max}} - T$$

$$\Delta t_{IV} = T - 4\Delta t_I - 2\Delta t_{II}$$

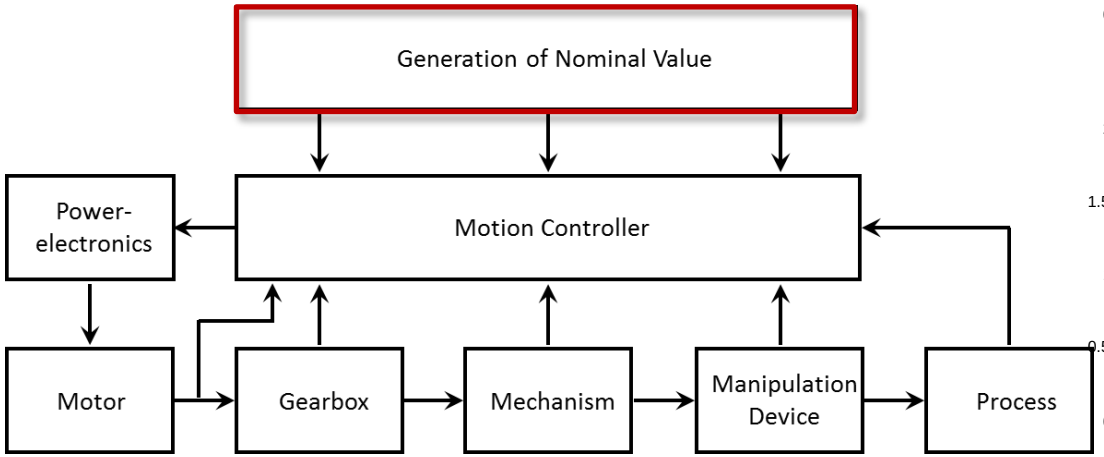
Generation of Nominal Value
Power-
electronics
Motion Controller
Motor
Gearbox
Mechanism
Manipulation
Device
Process

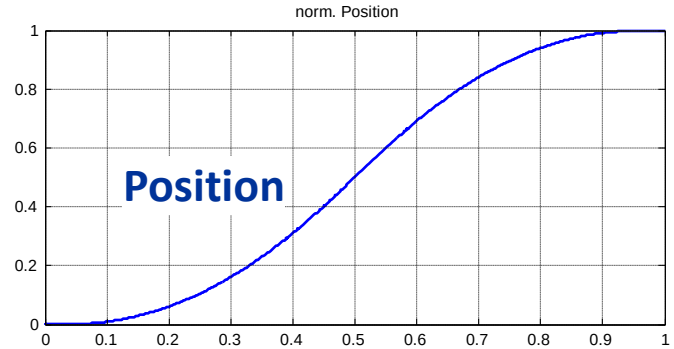
norm. Position
Position
1
0.8
0.6
0.4
0.2
0
0 0.1 0.2 0.3 0.4 0.5 0.6 0.7 0.8 0.9 1

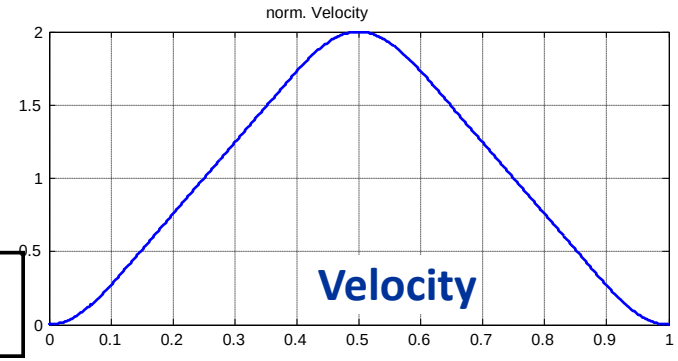
norm. Velocity
Velocity
2
1.5
1
0.5
0
0 0.1 0.2 0.3 0.4 0.5 0.6 0.7 0.8 0.9 1

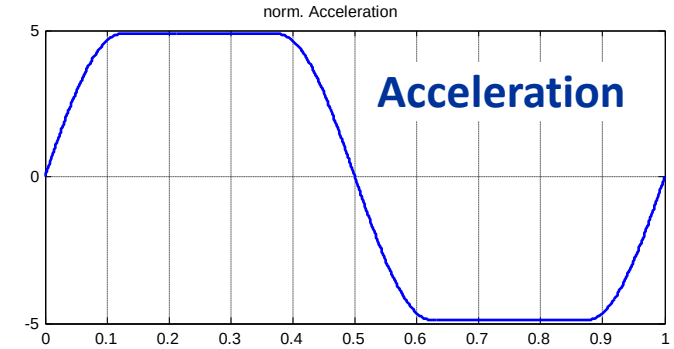
norm. Acceleration
Acceleration
5
0
-5
0 0.1 0.2 0.3 0.4 0.5 0.6 0.7 0.8 0.9 1

$$0 \leqslant z \leqslant \frac{1}{8} \qquad f_1 = \frac{2}{\pi+2}\left[z - \frac{1}{4\pi}\sin(4\pi z)\right] \tag{39}$$

$$f_1' = \frac{2}{\pi+2}\left[1 - \cos(4\pi z)\right] \tag{40}$$

$$f_1'' = \frac{8\pi}{\pi+2}\sin(4\pi z) \tag{41}$$

$$\frac{1}{8} \leqslant z \leqslant \frac{3}{8}$$

$$f_2 = \frac{1}{\pi+2}\left[4\pi z^2 + (2-\pi)z + \frac{\pi^2-8}{16\pi}\right] \tag{42}$$

$$f_2' = \frac{1}{\pi+2}(8\pi z + 2 - \pi) \tag{43}$$

$$f_2'' = \frac{8\pi}{\pi+2} \tag{44}$$

$$\frac{3}{8} \leqslant z \leqslant 0{,}5$$

$$f_3 = \frac{2}{\pi+2}\left\{(\pi+1)z - \frac{1}{4\pi}\sin\left[4\pi\left(z-\frac{1}{4}\right)\right] - \frac{\pi}{4}\right\} \tag{45}$$

$$f_3' = \frac{2}{\pi+2}\left\{\pi + 1 - \cos\left[4\pi\left(z-\frac{1}{4}\right)\right]\right\} \tag{46}$$

$$f_3'' = \frac{8\pi}{\pi+2}\sin\left[4\pi\left(z-\frac{1}{4}\right)\right] \tag{47}$$

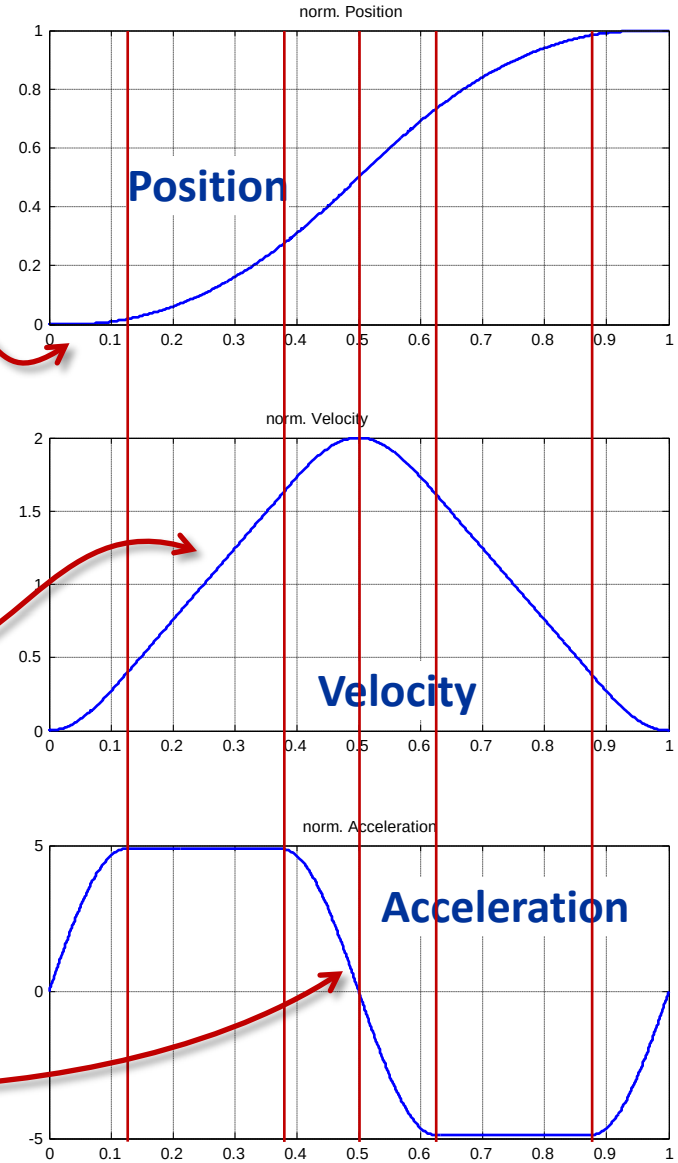

Analog PID-Position Controller

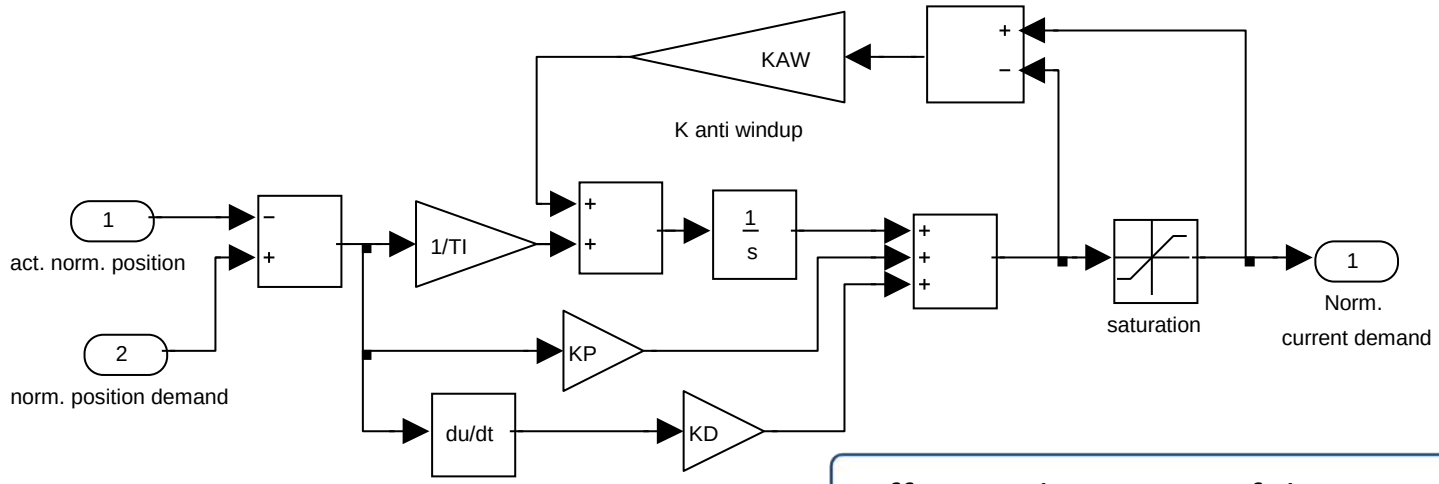

Differential equation of the position controller

$$i = -K_p(\varphi_{act} - \varphi_{dem}) - \frac{1}{T_i}\int(\varphi_{act} - \varphi_{dem})dt - K_D(\dot{\varphi}_{act} - \dot{\varphi}_{dem})$$

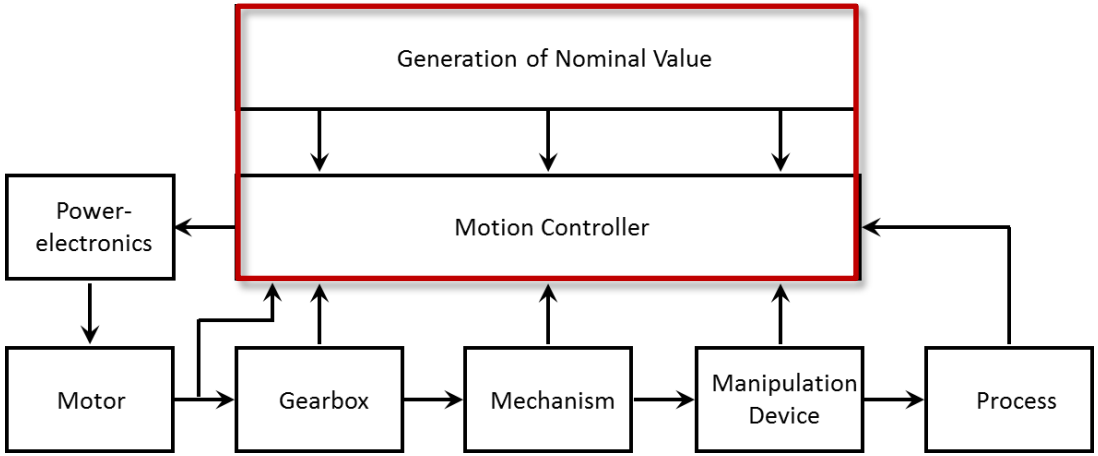

Complete Matlab/Simulink©-Model

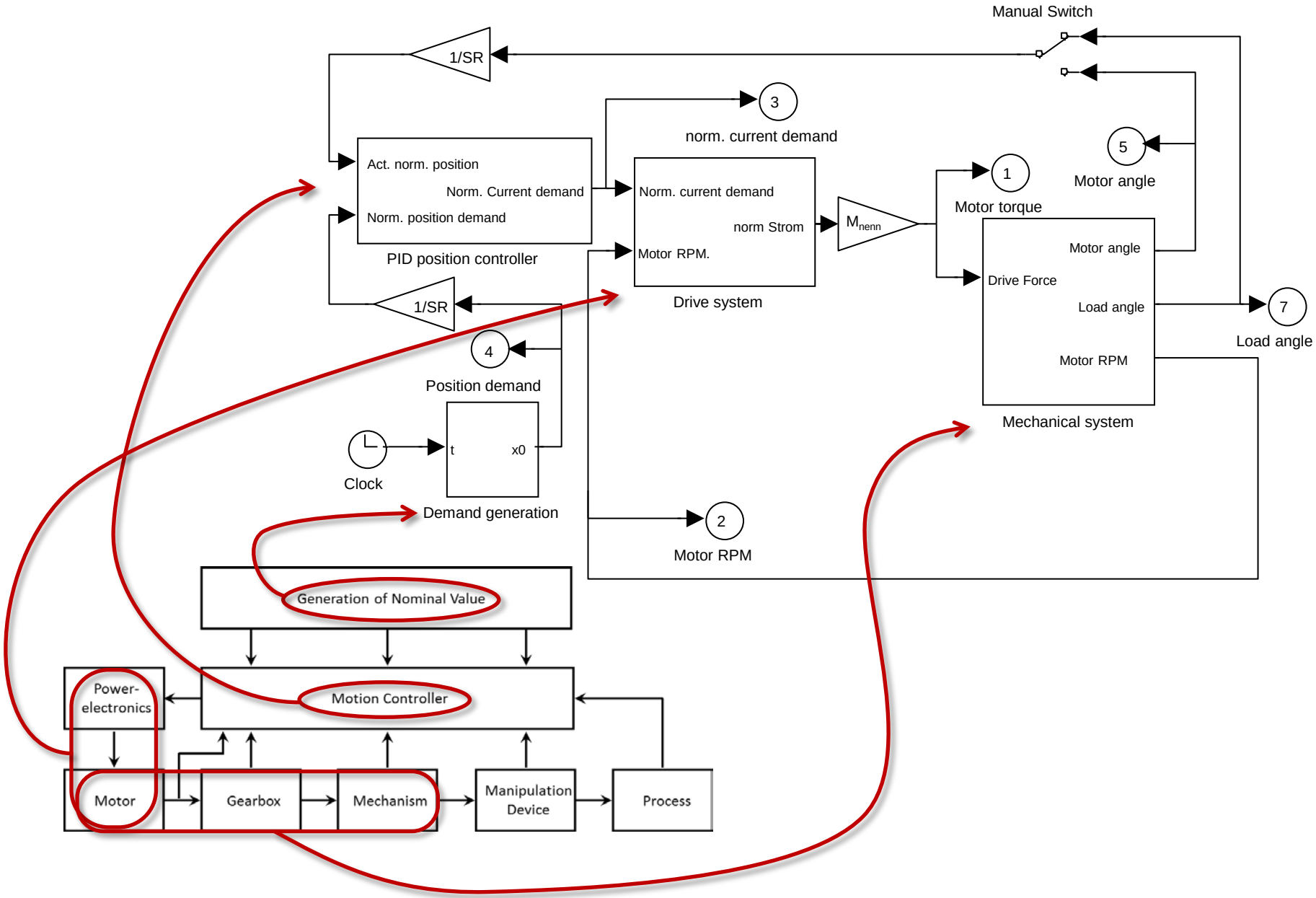

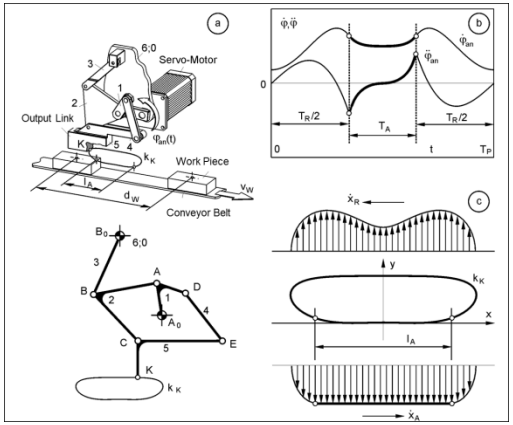

2 System Modelling

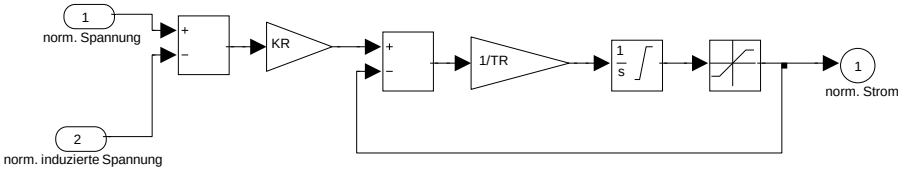

2.1 General Considerations

2.2 Motor Simulation Models

2.3 Control of Electric Drives and Mechanisms

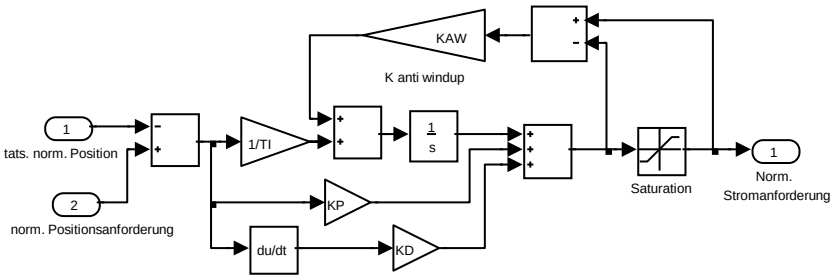

Thanks for your attention.

Kontakt:

Institut für Getriebetechnik und Maschinendynamik
RWTH Aachen
Kackertstraße 16-18
52072 Aachen

(+49)-241 80-95546
mbox@igm.rwth-aachen.de

Internet:

www.igm.rwth-aachen.de